FAQs for serial Com-Server:

Applications

Can Com-Servers be used to connect two Ethernet-LANS together over telephone cable?

Yes! Using Com-Servers in pairs operating as SLIP routers, you can enable this application. Further information and more technical details can be found on the application sheet.

Additional information:
Manual for the Com-Server Highspeed
Application example: Slip routers

How can a serial end device be made accessible via the Internet using Com-Servers?

As regards the hardware, the Com-Server first makes the connected serial end device available in the local Ethernet LAN. Because TCP / IP is used, as a protocol TCP / IP also constitutes the basis of the entire Internet, it is of course possible from here to also use any existing network infrastructure - up to and including the Internet itself. An easy alternative of making Com-Servers globally accessible, even if they do not have an officially assigned IP address, is available using NAT (Network Address Translation) which is integrated in several WAN routers.

Additional information:
Application example: NAT

How can a non-modifiable serial program talk to serial devices in the network?

The COM Port Redirector available for all common Windows systems allows you to create virtual COM ports on a computer. These ports look to an application just like a local standard COM port, although the connection across the Ethernet is redirected to a Com-Server to which the desired terminal device is connected. There are no limitations with respect to data transparency. When using serial protocols - such as are used for example on RS485 busses - the monitored character and acknowledgement delay times must be checked for their suitability for a network transmission.

Additional information:
Datasheet COM Port Redirector
Application example: COM Port Redirector

To what extent is the network additionally loaded by a serial connection make through a Com-Server?

To ensure that the network is not overloaded by an excessive packet rate, the Com-Server is equipped with the "network delay" system option, which acts as a protective function. By means of this tool, it is for example possible to define that the Com-Server in the Ethernet handles packets with a minimum interval of 30ms. For a baud rate of 9600 on the serial side, approx. 30 signs can thereby be received within the above time. In the case of a constant serial data flow, a network packet of the following length is generated approximately every 30 ms:

18-byte Ethernet frame + 20-byte IP header + 20-byte TCP header + 30-byte data = 88 bytes (~700 bits)

In the worst case, a TCP acknowledgment from the recipient with a length of approx. 500 bits is generated for each one of these packets. In practice, the number of such packets is, however, generally much less as TCP drivers acknowledge several incoming packets by means of one combined acknowledgment.
In most existing applications, a load of approx. 40.000 bits/s can be projected, which corresponds to a data load of under 0.5% in the case of a 10-Mbit Ethernet. The value of 30 ms for "network delay" is fixed and independent of the set baud rate. If the baud rate is, four example increased to 19,200 baud, the double amount of the data can be transferred per network packet. The network load however only increases to 0.7% as the sizes of the packet headers remain the same.

Note: *The calculation shown is based on the assumption of an unloaded Ethernet without considering possible above calculations assume that the Ethernet is not loaded and that there are no collisions or other interruptions of the data flow. In*

practice, such influences can lead to longer transfer periods and thus larger packets. This also reduces the network load by the Com-Servers as more data is transferred per packet.

Which are the delays that must be taken into account in connection with serial protocols?

Many serial protocols (e.g. 3964R) work such that the sent data blocks are acknowledged by the respective receiver, such as with the characters ACK or NACK. The time for this acknowledgement is monitored by means of a timeout (ADT = acknowledgement delay time). To establish this time, the delays on the transmission line as well as in the serial receiver are of interest.

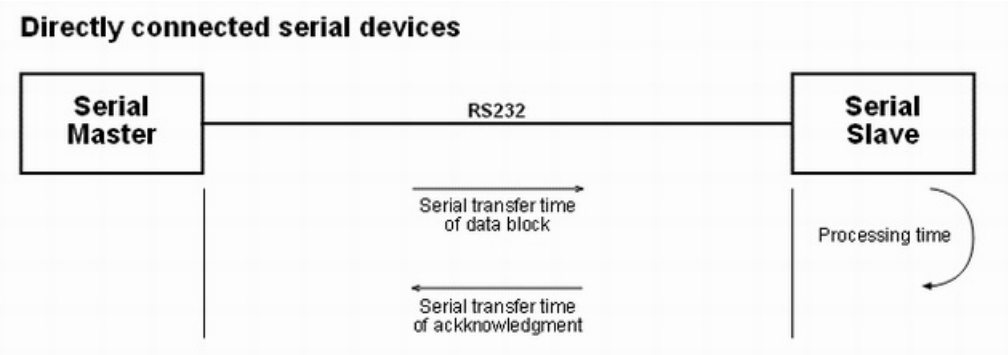

After the data block is sent by the software of the master to the serial driver, the following delays must be added for the dimensioning of ADT for a serial direct connection:

ADT = serial transfer time of data block + serial transfer time of data block + processing time at the slave

Example:
Length of data block: 100 bytes
Length of acknowledgment: 1 byte
Serial data rate: 9600 baud, no parity, 1 start bit, 8 data bits, 1 stop bit = ~ 1 ms / byte
Processing time at serial terminal device: 2ms

Minimum ADT: (100 bytes + 1 byte) + 2ms = ~103ms

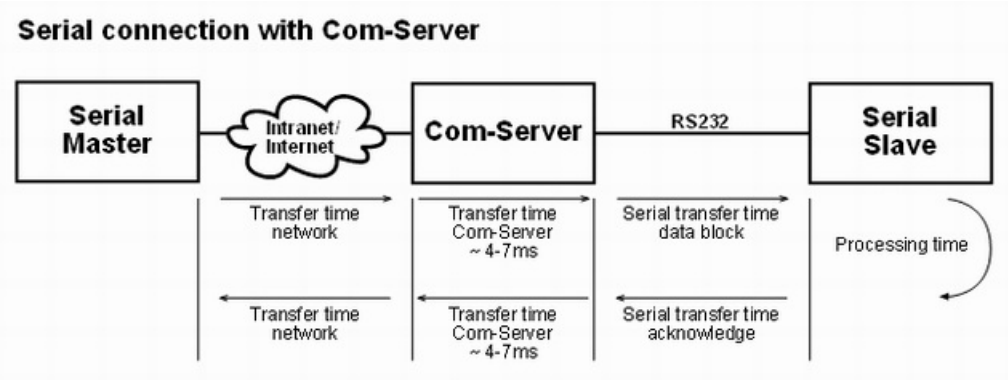

If a serial master and slave are linked over the network and a Com-Server, the transfer time of typically 4 to 7ms for communication in both directions (option "network delay" = 0) that is required by the Com-Server, must be added to the above value. In addition, delays within the network must also be taken into account. If the following conditions are met, a typical value of approx. 1 to 2 ms can be assumed:

- Network load < 30%
- No ARP address resolution, i.e. existing TCP connection
- no load-disconnecting components (switches, routers, etc.)

Compared with the above described example of a serial direct connection, the combination of network and Com-Server would result in a typical additional delay of approx. 10-18ms:

(2 x 4-7ms for Com-Server) + (2 x 1-2ms for Netzwerk)

How would you tunnel the connection between two serial devices through the network?

By using two Com-Servers in Box-to-Box mode. The only prerequisite for this mode is a TCP/IP connection (e.g. also over the Internet) between the two local networks. The complete setup of Box-to-Box mode can be done from just one Com-Server. For a detailed description of the necessary configuration steps, refer to the corresponding section in the manual.

Additional information:
Manual for the Com-Server Highspeed
Application example: Box-to-Box

How can Com-Servers be integrated in standard display systems e.g. those used in the areas of building services engineering or automation?

In order to remain independent of the wide range of standardized and vendor-specific interface protocols, state-of-the-art display systems use the OPC standard (OLE for Process Control) when communicating with external I/O points. Apart from the serial Com-Servers, the W&T OPC server also supports Web-IO and Web Thermometers and can thus be used as a universal solution in OPC-compatible application environments.

Additional information:
Download OPC server
Application example: Com-Server and automation technology

We are available to you in person:

Wiesemann & Theis GmbH
Porschestr. 12
42279 Wuppertal
Phone: +49 202/2680-110 (Mon.-Fri. 8 a.m. to 5 p.m.)
Fax: +49 202/2680-265
info@wut.de